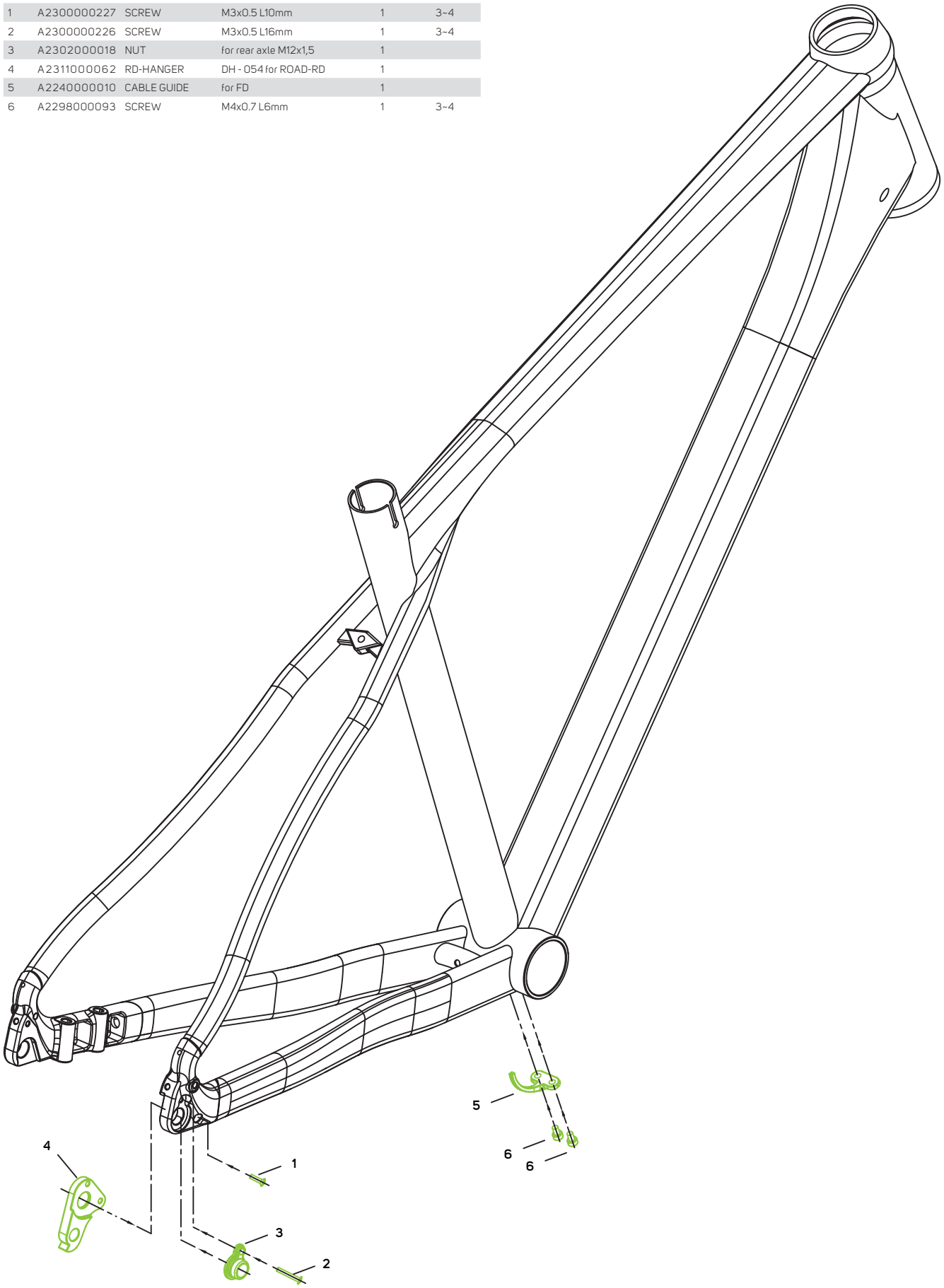No.	Item No.	Item	Detail information	Pieces	Torque Nm
1	A2300000227	SCREW	M3x0.5 L10mm	1	3~4
2	A2300000226	SCREW	M3x0.5 L16mm	1	3~4
3	A2302000018	NUT	for rear axle M12x1,5	1	
4	A2311000062	RD-HANGER	DH - 054 for ROAD-RD	1	
5	A2240000010	CABLE GUIDE	for FD	1	
6	A2298000093	SCREW	M4x0.7 L6mm	1	3~4